AMERICAN CRANE
& EQUIPMENT CORPORATION
ACECO
DOUGLASSVILLE, PA. 19518 U.S.A.
PHONE: 610-385-6061
FAX: 610-385-3191

3131
TOP RUNNING TROLLEY

30 TON CAPACITY

PRODUCT INFORMATION

DWG. NO: 3131B-1826

DATE: 01.11.00 | REVISION: 0

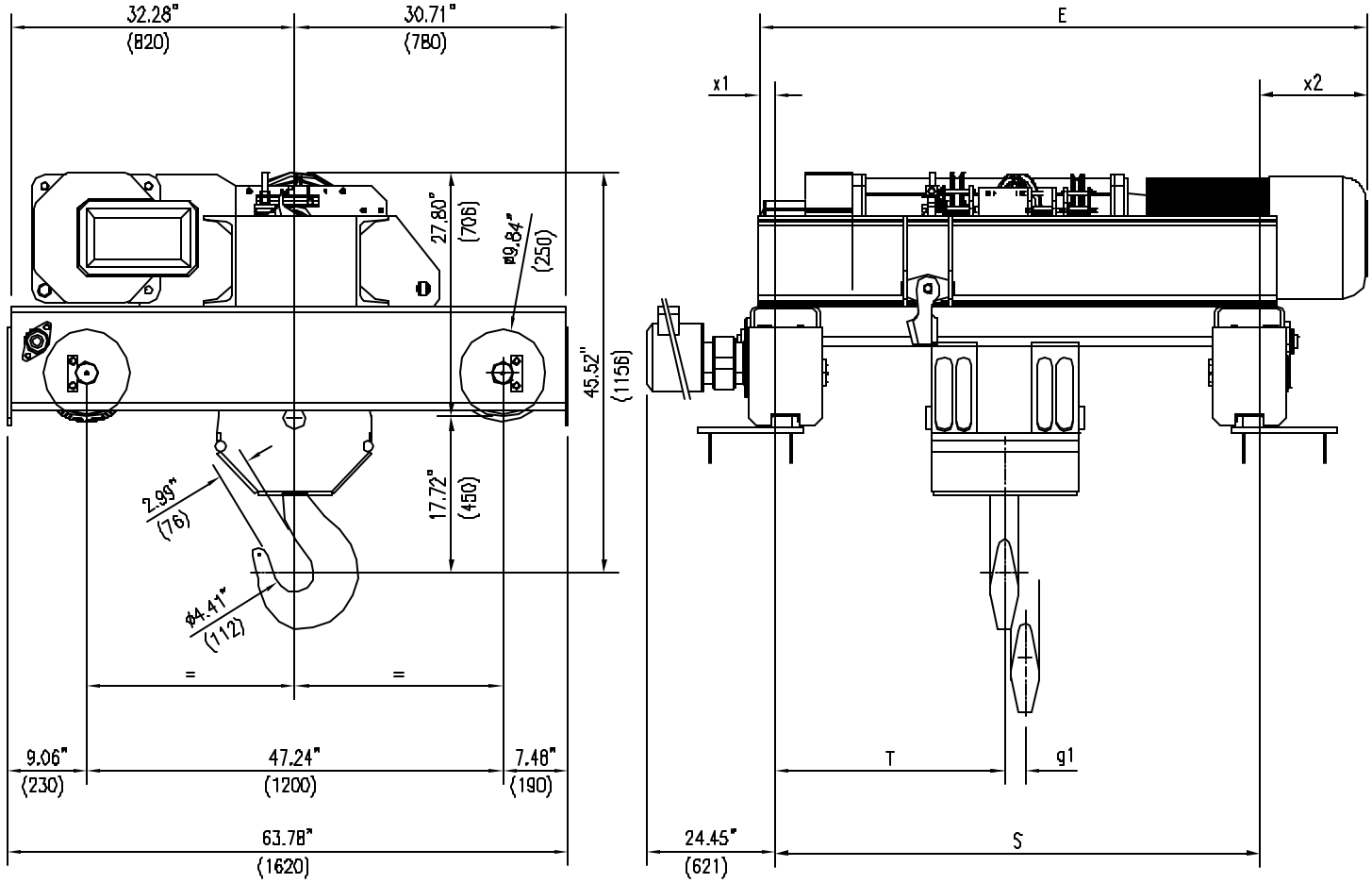

ACECO RESERVES THE RIGHT TO MAKE CHANGES WITHOUT NOTICE.

HOIST TECHNICAL DATA

CAPACITY:	30 TONS (60000 LBS)	HOIST CLASS:	HMI H4	HOIST MOTOR:	21.5/6.7 HP, 1800/600 RPM, TEFC, S3 - 30%, CLASS "F" INSULATION
HOIST SPEED:	9 / 3 F.P.M (OPT. SPEEDS AVAILABLE)	POWER SUPPLY:	460V-3PH-60HZ		
		HOIST MOTOR:	6275-62A	TROLLEY MOTOR:	2.4/.6 HP, 3600/900 RPM, TEFC, S3 - 60%, CLASS "F" INSULATION
TROLLEY SPEED:	83 / 20 F.P.M (OPT. SPEEDS AVAILABLE)	TROLLEY MOTOR:	9100-1575R08G		

DIMENSIONAL INFORMATION

HOIST TYPE	HEIGHT OF LIFT		S	T	E	g1	x1	x2	WEIGHT
	METERS	FEET	INCHES (mm)	INCHES (mm)	INCHES (mm)	INCHES (mm)	INCHES (mm)	INCHES (mm)	LBS (KG)
3131B-1826	4.0	13'-1"	55.11 (1400)	26.14 (664)	69.05 (1754)	2.83 (72)	9.05 (230)	.47 (12)	4156 (1885)
3131B-2826	5.5	18'-0"	55.11 (1400)	23.62 (600)	77.72 (1974)	3.94 (100)	15.75 (400)	2.44 (62)	4267 (1935)
3131B-3826	7.6	24'-11"	82.68 (2100)	38.62 (981)	89.53 (2274)	5.39 (137)	2.75 (70)	-.31 (-8)	4818 (2185)
3131B-4826	10.6	34'-9"	82.68 (2100)	37.52 (953)	107.24 (2724)	7.60 (193)	18.90 (480)	1.25 (32)	5193 (2355)