AMERICAN CRANE
& EQUIPMENT CORPORATION
ACECO
DOUGLASSVILLE, PA. 19518 U.S.A.
PHONE: 610-385-6061
FAX: 610-385-3191

3131
TOP RUNNING TROLLEY

20 TON CAPACITY

PRODUCT INFORMATION

DWG. NO: 3131B-1626

DATE: 01.11.00 | REVISION: 0

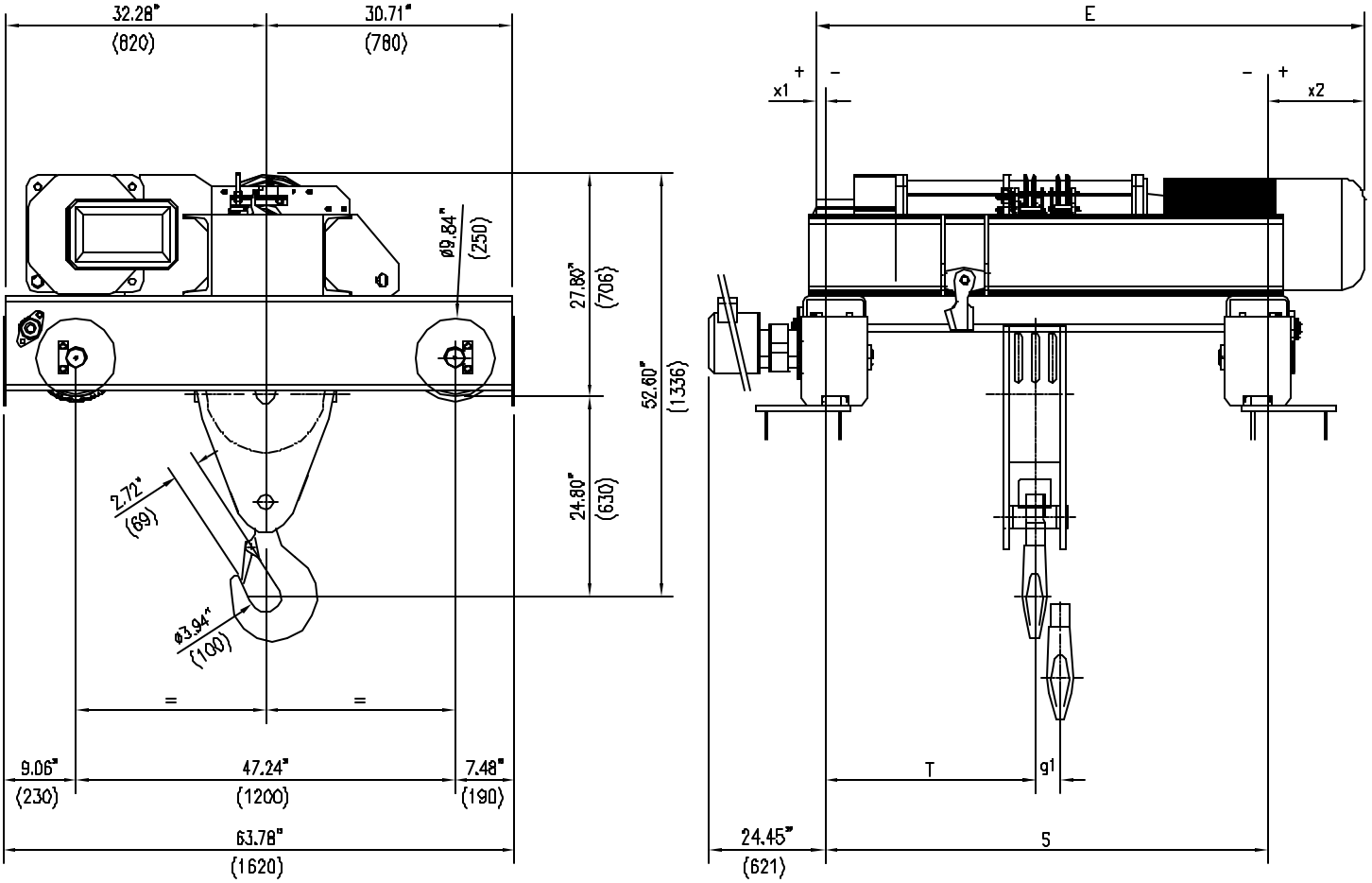

ACECO RESERVES THE RIGHT TO MAKE CHANGES WITHOUT NOTICE.

HOIST TECHNICAL DATA

CAPACITY:	20 TONS (40000 LBS)	HOIST CLASS:	HMI H4	HOIST MOTOR:	21.5/6.7 HP, 1800/600 RPM, TEFC, S3 - 30%, CLASS "F" INSULATION
HOIST SPEED:	11 / 4 F.P.M (OPT. SPEEDS AVAILABLE)	POWER SUPPLY:	460V-3PH-60HZ		
		HOIST MOTOR:	6275-62A	TROLLEY MOTOR:	2.4/.6 HP, 3600/900 RPM, TEFC, S3 - 60%, CLASS "F" INSULATION
TROLLEY SPEED:	83 / 20 F.P.M (OPT. SPEEDS AVAILABLE)	TROLLEY MOTOR:	9100-1575R08G		

DIMENSIONAL INFORMATION

HOIST TYPE	HEIGHT OF LIFT		S	T	E	g1	x1	x2	WEIGHT
	METERS	FEET	INCHES (mm)	INCHES (mm)	INCHES (mm)	INCHES (mm)	INCHES (mm)	INCHES (mm)	LBS (KG)
3131B-1626	5.3	17'-4"	55.11 (1400)	25.63 (651)	69.05 (1754)	3.82 (97)	7.28 (185)	2.24 (57)	3881 (1760)
3131B-2626	7.3	23'-11"	55.11 (1400)	24.92 (633)	77.72 (1974)	5.28 (134)	15.75 (400)	6.85 (174)	3991 (1810)
3131B-3626	10.0	32'-9"	82.68 (2100)	37.72 (958)	89.53 (2274)	7.20 (183)	11.81 (300)	-4.96 (-126)	4432 (2010)
3131B-4626	14.2	46'-7"	82.68 (2100)	36.26 (921)	107.24 (2724)	10.16 (258)	27.56 (700)	-2.99 (-76)	4575 (2075)