AMERICAN CRANE
& EQUIPMENT CORPORATION
ACECO
DOUGLASSVILLE, PA. 19518 U.S.A.
PHONE: 610-385-6061
FAX: 610-385-3191

3131
TOP RUNNING TROLLEY

7 1/2 TON CAPACITY

PRODUCT INFORMATION

DWG. NO: 3131B-1226

DATE: 01.11.00 | REVISION: 0

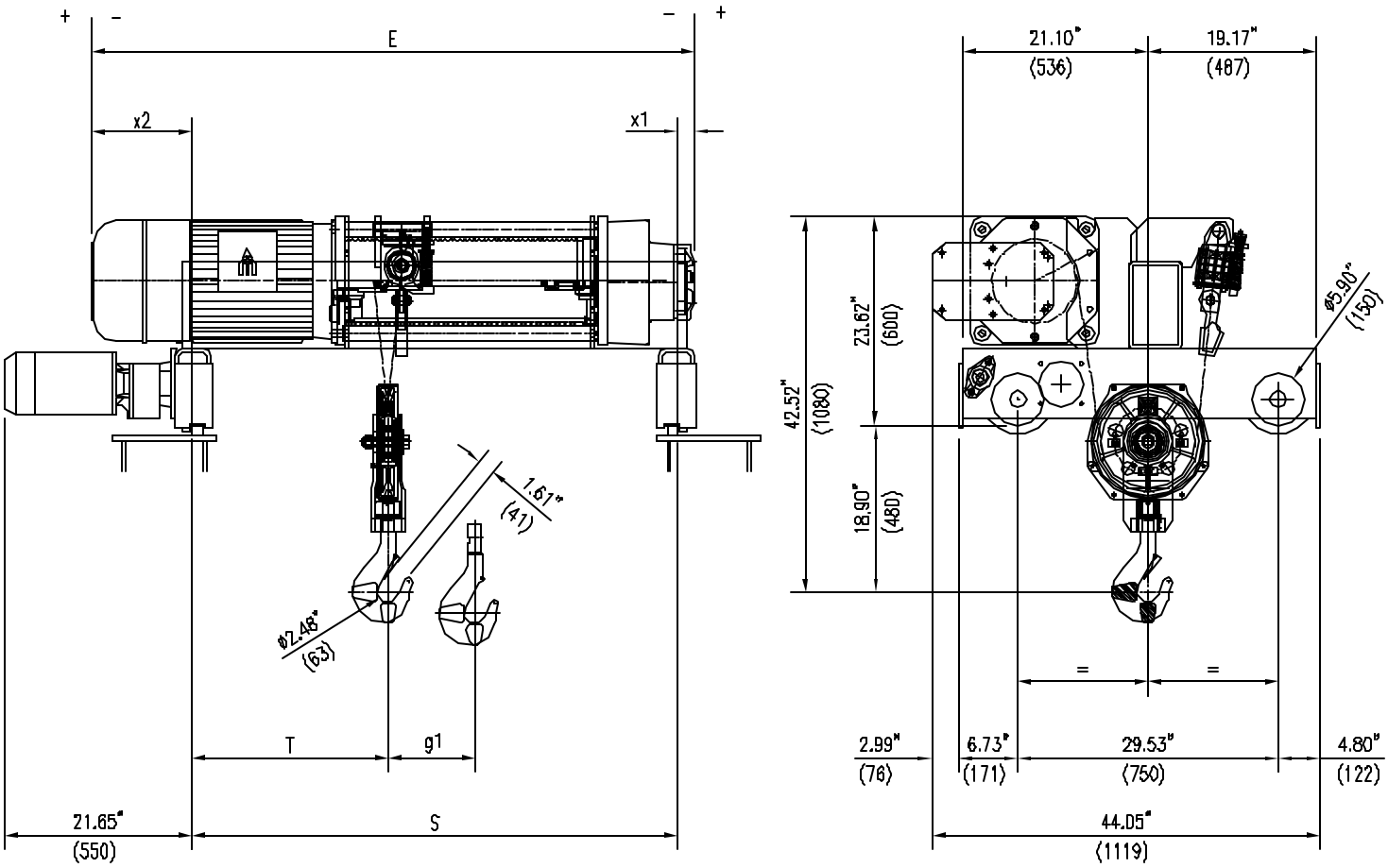

ACECO RESERVES THE RIGHT TO MAKE CHANGES WITHOUT NOTICE.

HOIST TECHNICAL DATA

CAPACITY:	7 1/2 TONS (15000 LBS)	HOIST CLASS:	HMI H4	HOIST MOTOR:	21.5/6.7 HP, 1800/600 RPM, TEFC, S3 - 30%, CLASS "F" INSULATION
HOIST SPEED:	34 / 10 F.P.M (OPT. SPEEDS AVAILABLE)	POWER SUPPLY:	460V-3PH-60HZ		
		HOIST MOTOR:	6275-62A	TROLLEY MOTOR:	.9/.2 HP, 3600/900 RPM, TEFC, S3 - 60%, CLASS "F" INSULATION
TROLLEY SPEED:	67 / 16 F.P.M (OPT. SPEEDS AVAILABLE)	TROLLEY MOTOR:	9100-1145R08C		

DIMENSIONAL INFORMATION

HOIST TYPE	HEIGHT OF LIFT		S	T	E	g1	x1	x2	WEIGHT
	METERS	FEET	INCHES (mm)	INCHES (mm)	INCHES (mm)	INCHES (mm)	INCHES (mm)	INCHES (mm)	LBS (KG)
3131B-1226	16.0	52'-6"	55.11 (1400)	21.85 (555)	69.05 (1754)	11.42 (290)	2.75 (70)	11.81 (284)	2646 (1200)
3131B-2226	22.0	72'-2"	55.11 (1400)	19.69 (500)	77.72 (1974)	15.75 (400)	9.45 (240)	13.15 (334)	2756 (1250)
3131B-3226	30.3	99'-5"	82.68 (2100)	30.51 (775)	89.53 (2274)	21.65 (550)	5.51 (140)	1.34 (34)	3034 (1376)
3131B-4226	42.6	139'-9"	82.68 (2100)	26.10 (663)	107.24 (2724)	30.52 (775)	17.72 (450)	6.85 (174)	3175 (1440)