AMERICAN CRANE
& EQUIPMENT CORPORATION
DOUGLASSVILLE, PA. 19518 U.S.A.
PHONE: 610-385-6061
FAX: 610-385-3191

3122
TOP RUNNING TROLLEY

10 TON CAPACITY

PRODUCT INFORMATION

DWG. NO: 3122B-1426

DATE: 08.11.00 | REVISION: 0

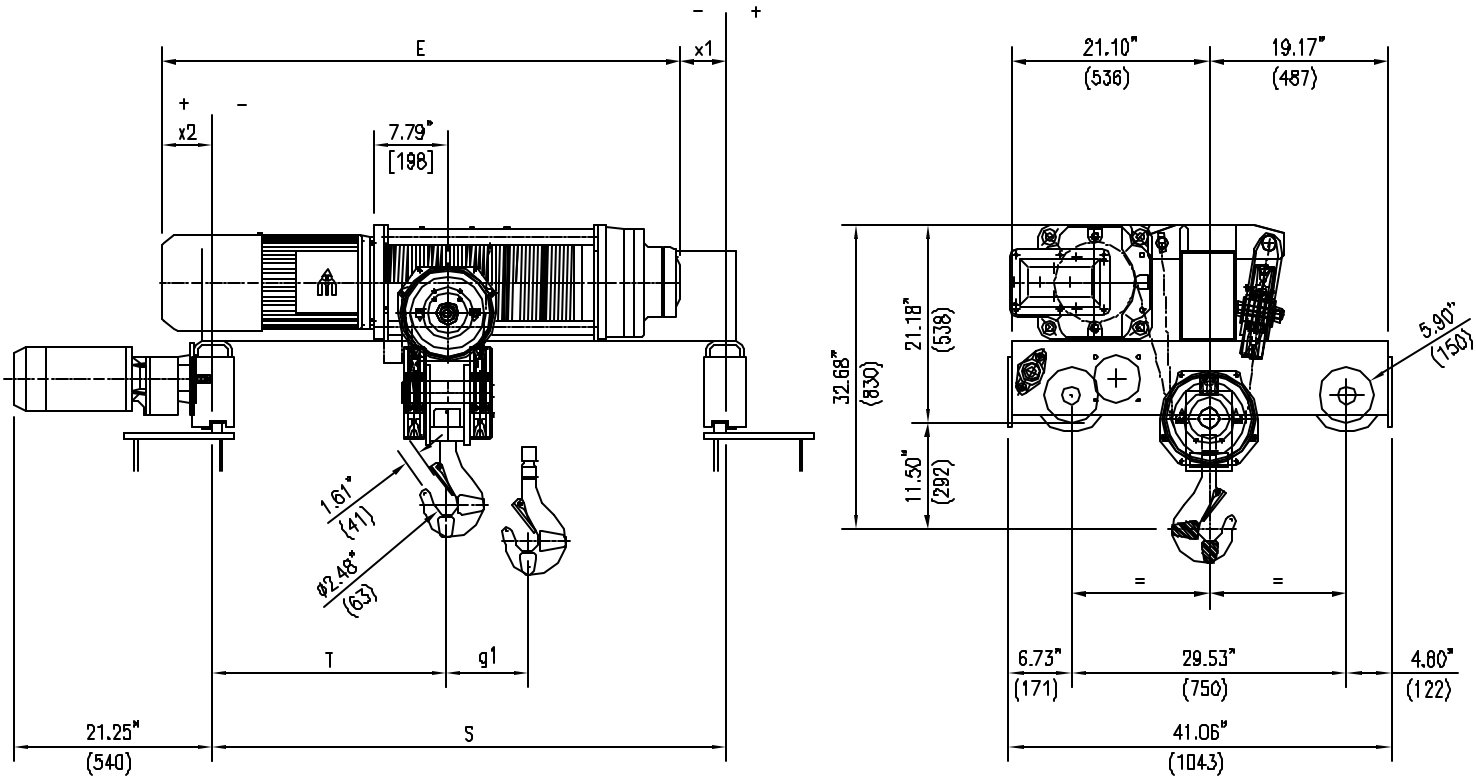

ACECO RESERVES THE RIGHT TO MAKE CHANGES WITHOUT NOTICE.

HOIST TECHNICAL DATA

CAPACITY:	10 TONS (20000 LBS)	HOIST CLASS:	HMI H4	HOIST MOTOR:	12/4 HP, 1800/600 RPM, TEFC, S3 - 40%, CLASS "F" INSULATION
HOIST SPEED:	16 / 5 F.P.M (OPT. SPEEDS AVAILABLE)	POWER SUPPLY:	460V-3PH-60HZ		
TROLLEY SPEED:	67 / 16 F.P.M (OPT. SPEEDS AVAILABLE)	HOIST MOTOR:	6275-58A	TROLLEY MOTOR:	.9/.2 HP, 3600/900 RPM, TEFC, S3 - 60%, CLASS "F" INSULATION
		TROLLEY MOTOR:	9100-1145R08G		

DIMENSIONAL INFORMATION

HOIST TYPE	HEIGHT OF LIFT		S	T	E	g1	x1	x2	WEIGHT
	METERS	FEET	INCHES (mm)	INCHES (mm)	INCHES (mm)	INCHES (mm)	INCHES (mm)	INCHES (mm)	LBS (KG)
3122B-1426	6.5	21'-3"	55.11 (1400)	25.35 (644)	57.48 (1460)	4.37 (111)	-1.18 (-30)	3.54 (90)	1378 (625)
3122B-2426	8.9	29'-2"	55.11 (1400)	24.61 (625)	63.38 (1610)	5.87 (149)	4.92 (125)	3.35 (85)	1411 (640)
3122B-3426	12.2	40'-0"	55.11 (1400)	23.54 (598)	72.05 (1830)	8.03 (204)	13.38 (340)	8.90 (226)	1466 (665)
3122B-4426	16.7	54'-9"	82.68 (2100)	35.83 (910)	83.86 (2130)	10.98 (279)	-1.97 (-50)	3.15 (80)	1588 (720)