AMERICAN CRANE
& EQUIPMENT CORPORATION
DOUGLASSVILLE, PA. 19518 U.S.A.
PHONE: 610-385-6061
FAX: 610-385-3191

3122
TOP RUNNING TROLLEY

5 TON CAPACITY

PRODUCT INFORMATION

DWG. NO: 3122B-1226

DATE: 08.11.00 | REVISION: 0

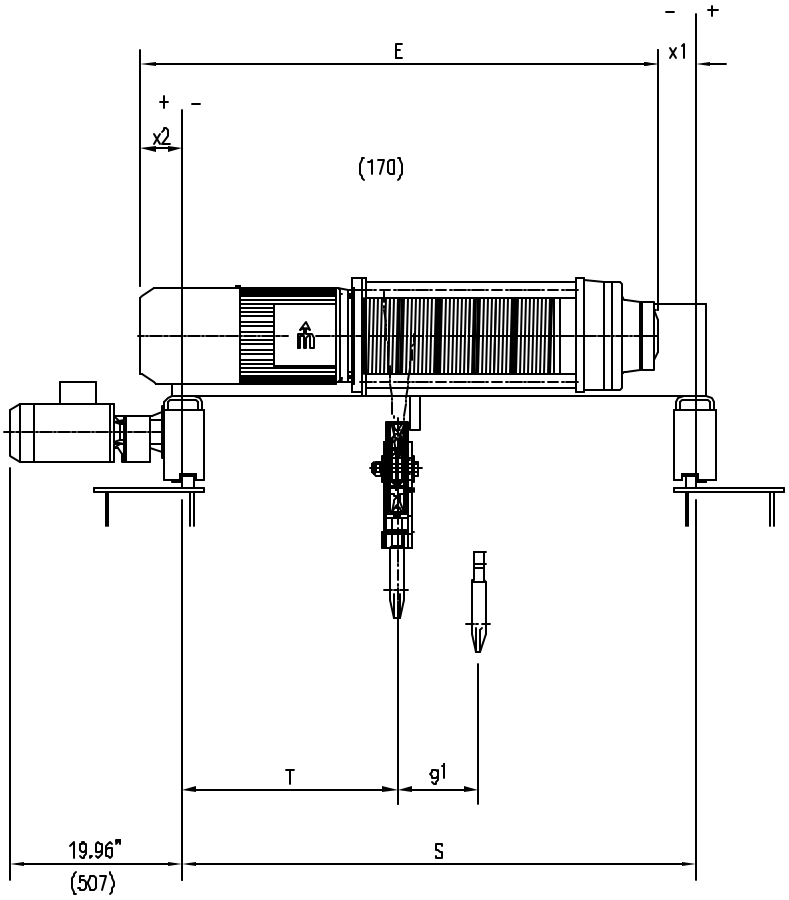

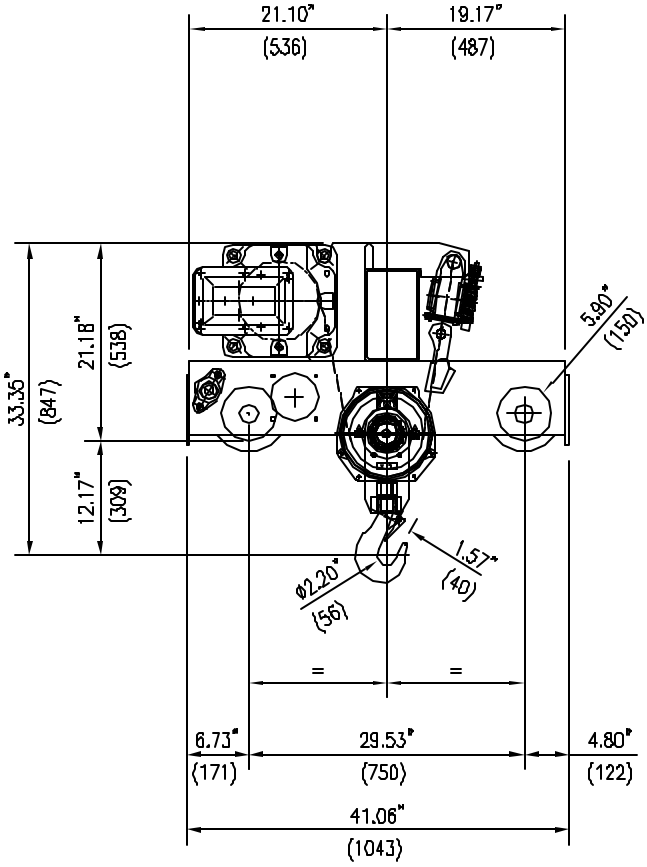

ACECO RESERVES THE RIGHT TO MAKE CHANGES WITHOUT NOTICE.

HOIST TECHNICAL DATA

CAPACITY:	5 TONS (10000 LBS)	HOIST CLASS:	HMI H4	HOIST MOTOR:	12/4 HP, 1800/600 RPM, TEFC, S3 - 40%, CLASS "F" INSULATION
HOIST SPEED:	32 / 10 F.P.M (OPT. SPEEDS AVAILABLE)	POWER SUPPLY:	460V-3PH-60HZ		
		HOIST MOTOR:	6275-58A	TROLLEY MOTOR:	.4/.1 HP, 3600/900 RPM, TEFC, S3 - 60%, CLASS "F" INSULATION
TROLLEY SPEED:	67 / 16 F.P.M (OPT. SPEEDS AVAILABLE)	TROLLEY MOTOR:	9100-1135ROBG		

DIMENSIONAL INFORMATION

HOIST TYPE	HEIGHT OF LIFT		S	T	E	g1	x1	x2	WEIGHT
	METERS	FEET	INCHES (mm)	INCHES (mm)	INCHES (mm)	INCHES (mm)	INCHES (mm)	INCHES (mm)	LBS (KG)
3122B-1226	13.1	43'-0"	55.11 (1400)	23.19 (589)	57.48 (1460)	8.74 (222)	-1.18 (-30)	3.54 (90)	1323 (600)
3122B-2226	17.8	58'-5"	55.11 (1400)	21.69 (551)	63.39 (1610)	11.69 (297)	4.92 (125)	3.35 (85)	1356 (615)
3122B-3226	24.4	80'-0"	55.11 (1400)	19.53 (496)	72.05 (1830)	16.02 (407)	13.39 (340)	3.54 (90)	1411 (640)
3122B-4226	33.4	109'-7"	82.68 (2100)	30.35 (771)	83.86 (2130)	21.93 (557)	-1.97 (-50)	3.15 (80)	1532 (695)