AMERICAN CRANE
& EQUIPMENT CORPORATION
DOUGLASSVILLE, PA. 19518 U.S.A.
PHONE: 610-385-6061
FAX: 610-385-3191

3121
TOP RUNNING TROLLEY

7 1/2 TON CAPACITY

PRODUCT INFORMATION

DWG. NO: 3121B-1426

DATE: 08.11.00 | REVISION: 0

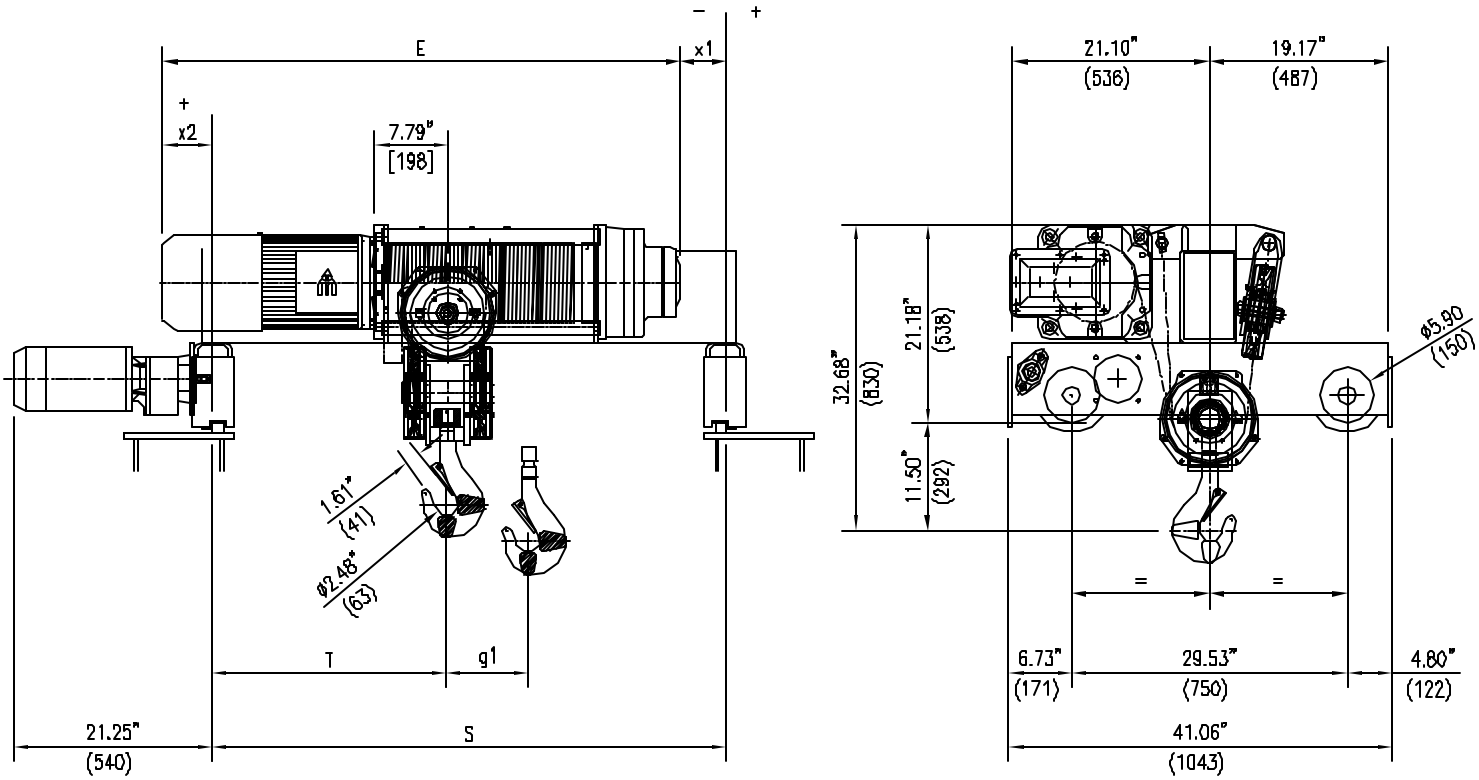

ACECO RESERVES THE RIGHT TO MAKE CHANGES WITHOUT NOTICE.

HOIST TECHNICAL DATA

CAPACITY:	7 1/2 TONS (15000 LBS)	HOIST CLASS:	HMI H4	HOIST MOTOR:	9.8/2.8 HP, 1800/600 RPM, TEFC, S3 - 50%, CLASS "F" INSULATION
HOIST SPEED:	16 / 5 F.P.M (OPT. SPEEDS AVAILABLE)	POWER SUPPLY:	460V-3PH-60HZ		
		HOIST MOTOR:	6275-56	TROLLEY MOTOR:	.9/.2 HP, 3600/900 RPM, TEFC, S3 - 60%, CLASS "F" INSULATION
TROLLEY SPEED:	67 / 16 F.P.M (OPT. SPEEDS AVAILABLE)	TROLLEY MOTOR:	9100-1145R08C		

DIMENSIONAL INFORMATION

HOIST TYPE	HEIGHT OF LIFT		S	T	E	g1	x1	x2	WEIGHT
	METERS	FEET	INCHES (mm)	INCHES (mm)	INCHES (mm)	INCHES (mm)	INCHES (mm)	INCHES (mm)	LBS (KG)
3121B-1426	6.5	21'-3"	55.11 (1400)	25.35 (644)	56.92 (1446)	4.37 (111)	-1.18 (-30)	2.99 (76)	1378 (625)
3121B-2426	8.9	29'-2"	55.11 (1400)	24.61 (625)	62.83 (1596)	5.87 (149)	4.92 (125)	2.80 (71)	1411 (640)
3121B-3426	12.2	40'-0"	55.11 (1400)	23.54 (598)	71.49 (1816)	8.03 (204)	13.38 (340)	2.99 (76)	1466 (665)
3121B-4426	16.7	54'-9"	82.68 (2100)	35.83 (910)	83.31 (2116)	10.98 (279)	-1.97 (-50)	2.60 (66)	1588 (720)