AMERICAN CRANE
& EQUIPMENT CORPORATION
DOUGLASSVILLE, PA. 19518 U.S.A.
PHONE: 610-385-6061
FAX: 610-385-3191

3121
TOP RUNNING TROLLEY

3 3/4 TON CAPACITY

PRODUCT INFORMATION

DWG. NO: 3121B-1226

DATE: 08.11.00 | REVISION: 0

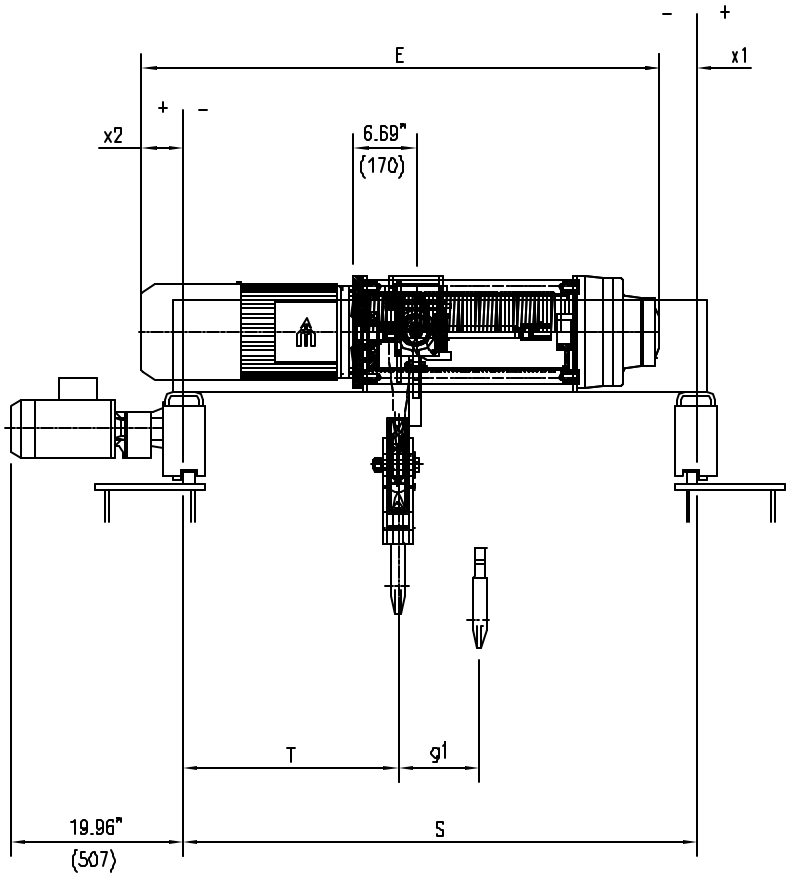

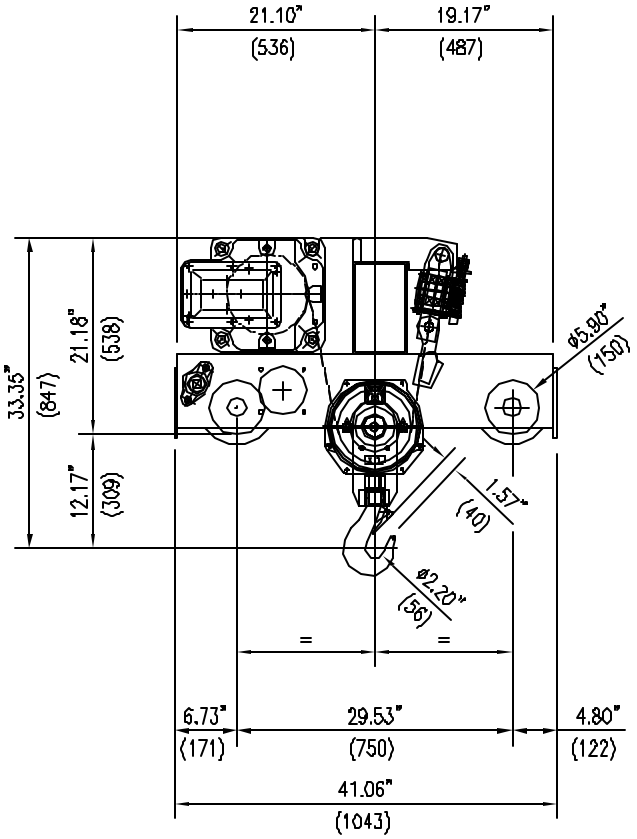

ACECO RESERVES THE RIGHT TO MAKE CHANGES WITHOUT NOTICE.

HOIST TECHNICAL DATA

CAPACITY:	3 3/4 TONS (7500 LBS)	HOIST CLASS:	HMI H4	HOIST MOTOR:	9.8/2.8 HP, 1800/600 RPM, TEFC, S3 - 40%, CLASS "F" INSULATION
HOIST SPEED:	32 / 10 F.P.M (OPT. SPEEDS AVAILABLE)	POWER SUPPLY:	460V-3PH-60HZ		
		HOIST MOTOR:	6275-58	TROLLEY MOTOR:	.4/.1 HP, 3600/900 RPM, TEFC, S3 - 60%, CLASS "F" INSULATION
TROLLEY SPEED:	67 / 16 F.P.M (OPT. SPEEDS AVAILABLE)	TROLLEY MOTOR:	9100-1135R08G		

DIMENSIONAL INFORMATION

HOIST TYPE	HEIGHT OF LIFT		S	T	E	g1	x1	x2	WEIGHT
	METERS	FEET	INCHES (mm)	INCHES (mm)	INCHES (mm)	INCHES (mm)	INCHES (mm)	INCHES (mm)	LBS (KG)
3121B-1226	13.1	43'-0"	55.11 (1400)	23.19 (589)	56.92 (1446)	8.74 (222)	-1.97 (-50)	3.78 (96)	1323 (600)
3121B-2226	17.8	58'-5"	55.11 (1400)	21.69 (551)	62.83 (1596)	11.69 (297)	2.56 (65)	5.16 (131)	1356 (615)
3121B-3226	24.4	80'-0"	55.11 (1400)	19.53 (496)	71.49 (1816)	16.02 (407)	11.02 (280)	5.35 (136)	1411 (640)
3121B-4226	33.4	109'-7"	82.68 (2100)	30.35 (771)	83.31 (2116)	21.93 (557)	-4.53 (-115)	5.16 (131)	1532 (695)